ON THE SPOT
QUALITY IN LIGHTING SINCE 1994

GA016Aspect

Color Rendering:
CRI > 90

Beam Angle:
15 °, 28 °, 35 °

Color options:
Black, White, Silver

Color Temperature CCT:
2700K, 3000K, 3500K, 4000K

Material:
Die-cast aluminium

Wattage:
33 W (module)

Luminous flux:
3225lm (2700K B.BBL)
3350lm (3000K B.BBL)
3400lm (3500K B.BBL)
3575lm (4000K)

Lifetime:
50.000 hours L80B10

Color consistency:
MacAdams 2 SDCM

Guarantee:
5 years (LED Chip & driver)

Installation:
Nordic Aluminium 3-phase track

LED chip:
Citizen

Protection:
IP20

Dimmable:
Available CASAMBI, DALI

Certifications:
CE, EAC

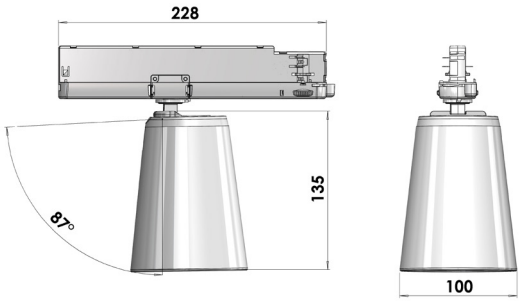

On The Spot | mail@onthespot.net